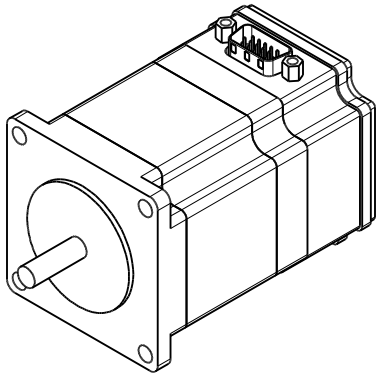

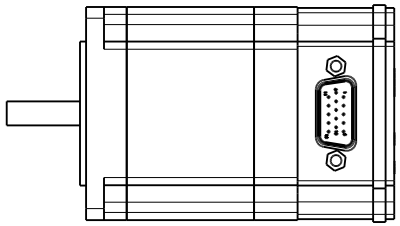

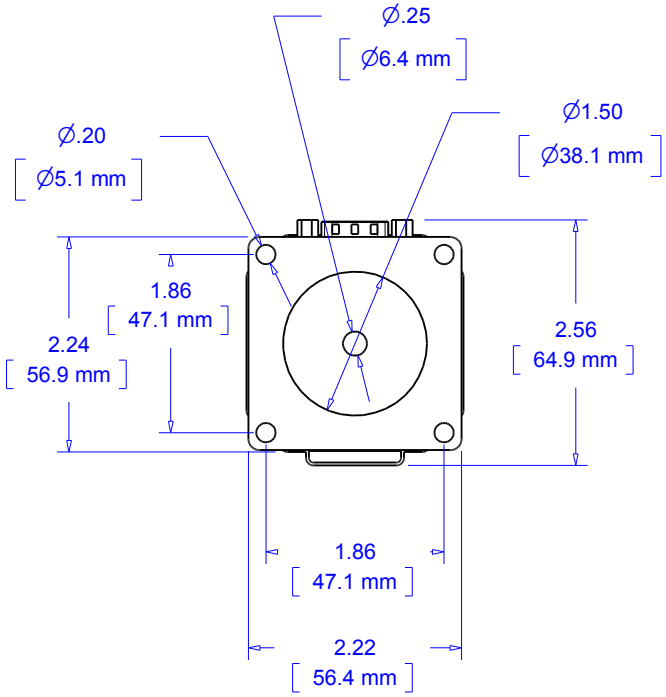
Ø.25
[Ø6.4 mm]
Ø.20
[Ø5.1 mm]
Ø1.50
[Ø38.1 mm]
1.86
[47.1 mm]
2.24
[56.9 mm]
2.56
[64.9 mm]
1.86
[47.1 mm]
2.22
[56.4 mm]

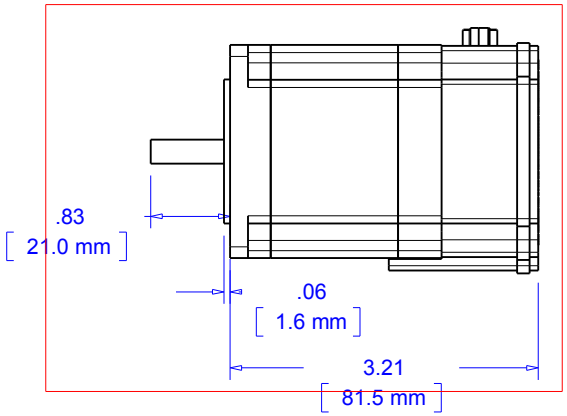
.83
[21.0 mm]
.06
[1.6 mm]
3.21
[81.5 mm]

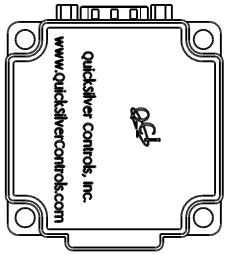
quicksilver controls, inc.
www.quicksilvercontrols.com