24-Bit ADC Bridge Converter with SPI Communications

The 24-Bit ADC bridge converter is designed to sense small analog signals from a transducer which can be read by QuickSilver Controls' SilverSterling S2/S3 controller series, SilverNugget X-series servo controllers, and SilverMax X-series servo motors via SPI communications. The bridge converter is available in two options, board only and boxed. Both options include two 4ft. cables that plug to P1 (SPI communications) and P2 (transducer input). Both cables are cutoff on the termination end to allow customer to customize cable length. To enable SPI communications, SilverSterling S2/S3 controllers require minimum firmware revision 34 and SilverNugget/SilverMax X-series require minimum firmware revision 29.

Connectors

Table 1. P1* – SPI Communications

Signal	P1 10 pin	Wire - Color	AWG	SilverMax SilverNugget X-series	SilverSterling S2 & S3
DGND	1	Shields P1,2	26	Logic Ground	Logic Ground
DGND	2	Shields P3,4	26	Logic Ground	Logic Ground
DGND	3	P2-1 Green	26	Logic Ground	Logic Ground
SOMI	4	P2-2 Blue	26	I/O#5	I/O#1
5 volts	5	P3-1 Red	26	+5v	+5v
CLK	6	P3-2 Black	26	I/O#6	I/O#3
5 volts	7	P4-1 Orange	26	+5v	+5v
SIMO	8	P4-2 Brown	26	I/O#4	I/O#4
5 volts	9	P1-1 Yellow	26	+5v	+5v
$\overline{\text{Chip Select}}$	10	P1-2 White	26	I/O#7	I/O#2
Note: Shields may be tied together - all are DGND					

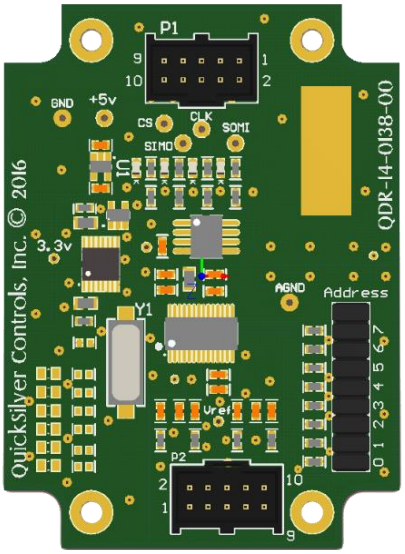

Figure 1 – Top View

Table 2. P2* – Transducer Input

Signal	P2 10 pin	Wire - Color	AWG
AGND	1	P2-1 Green	26
Sense+	2	P1-1 Yellow	26
AGND	3	P2-2 Blue	26
Sense-	4	P1-2 White	26
Excitation-	5	P3-2 Black	26
Excitation+	6	P3-1 Red	26
AGND	7	Shields P1, P2	26
Out+	8	P4-1 Orange	26
AGND	9	Shields P3, P4	26
Out-	10	P4-2 Brown	26

Figure 2 – Board with Open Box†
(shown with cable glands)

*Manufacturer: Molex
Manufacturer Part Number: 090130-1210
Mating Connector Part Number: 90142-0010

†Manufacturer: Hammond Manufacturing
Manufacturer Part Number: RL6115
Box Dimension: 3.150" L x 2.362" W x 1.575"

QuickControl® and QCI® are Registered Trademarks of QuickSilver Controls, Inc. SilverLode™, SilverMax™, SilverNugget™, SilverDust™, PVIA™, QuickSilver Controls™, and AntiHunt™ are trademarks of QuickSilver Controls, Inc.

Wiring

Table 3. Load Cell Wiring

Signal Name	Transducer Input P2 Connector
Excitation +	6
Excitation -	5
Out+	8
Out-	10
Sense +	2
Sense -	4

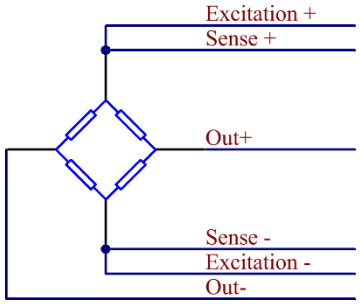

For 4-wire load cells, connect Sense+ to Excitation+ and Sense- to Excitation- to achieve greater noise immunity—variations in the excitation, i.e. due to voltage drop, are canceled out by the sense inputs, minimizing measurement error.

Mechanical Dimensions

QCI-BCB-04

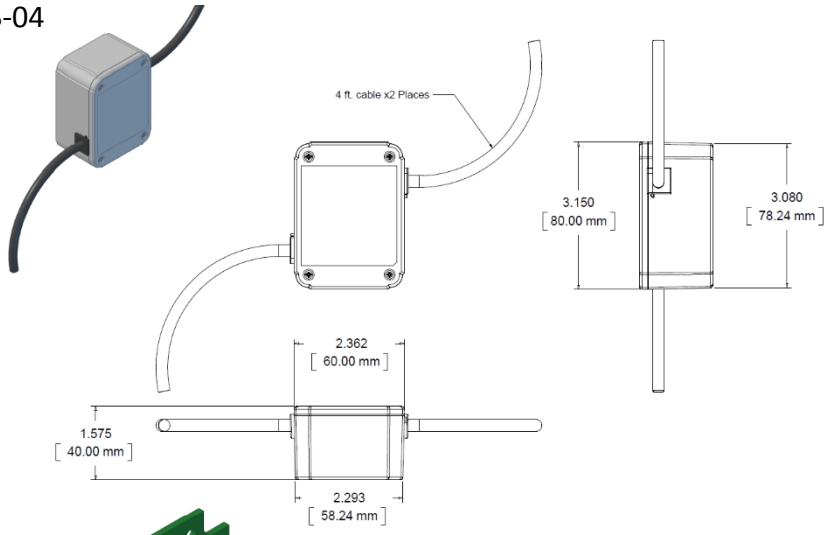

QCI-BC-04

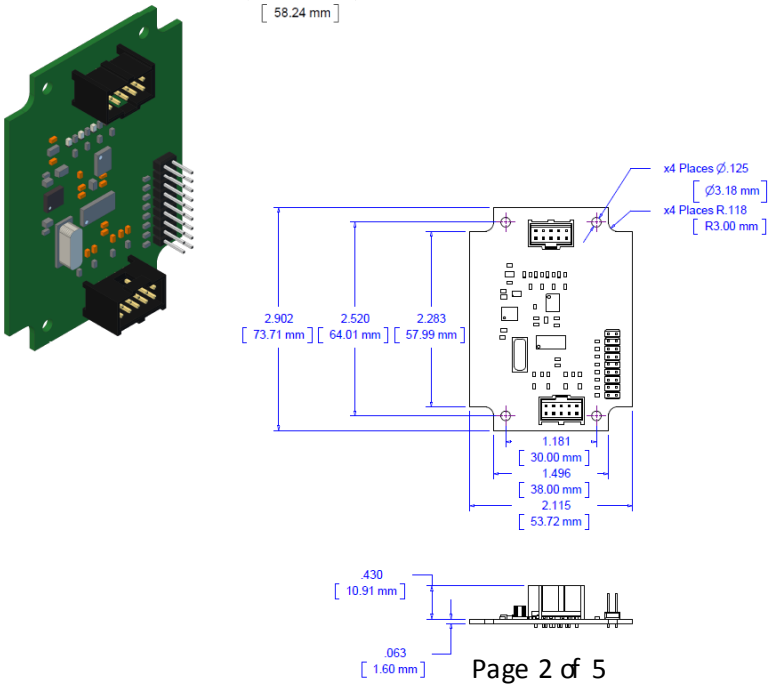

Typical System Wiring using SilverMax X-series Servo Motor

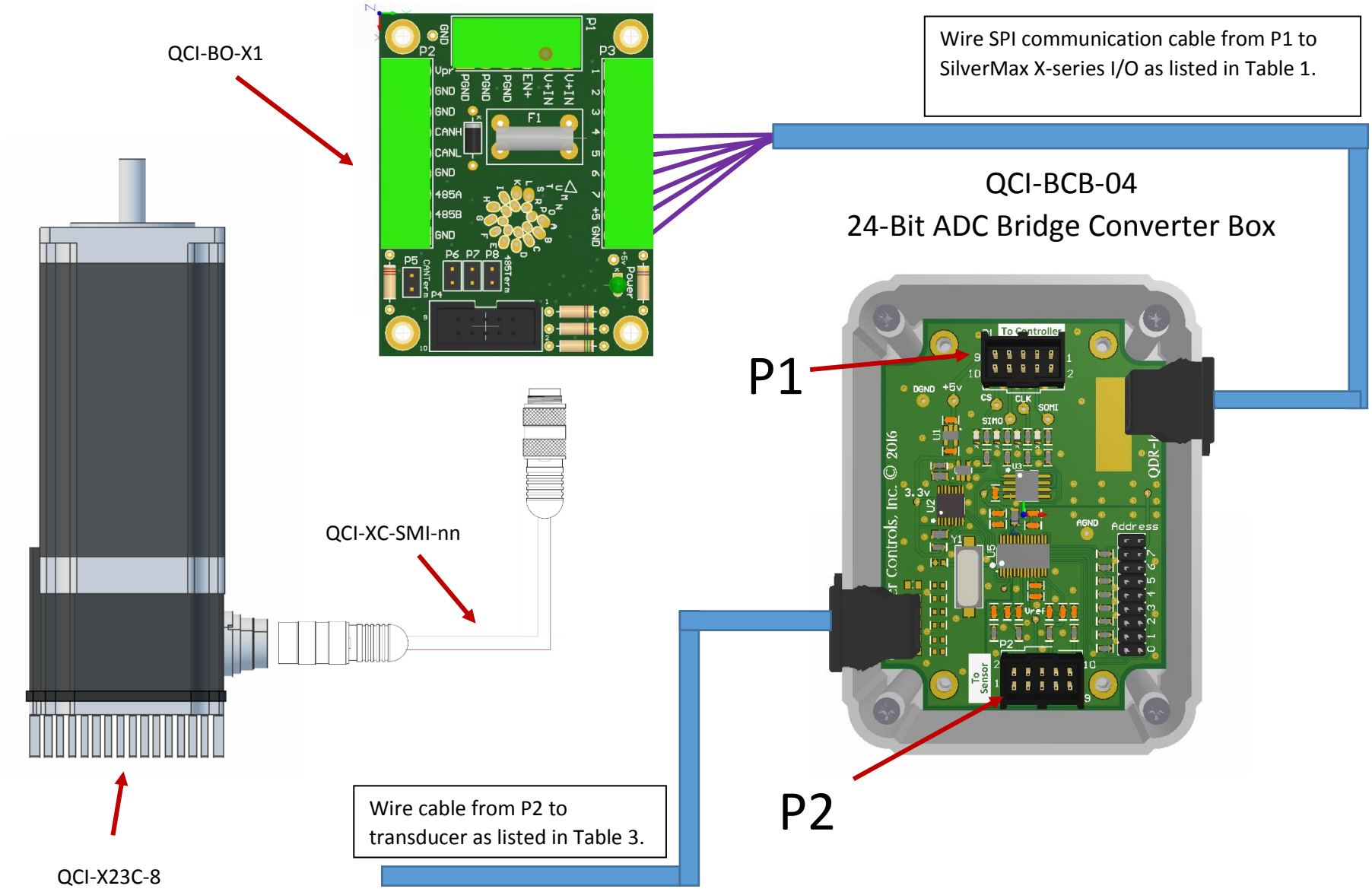

Typical System Wiring using SilverSterling series controller

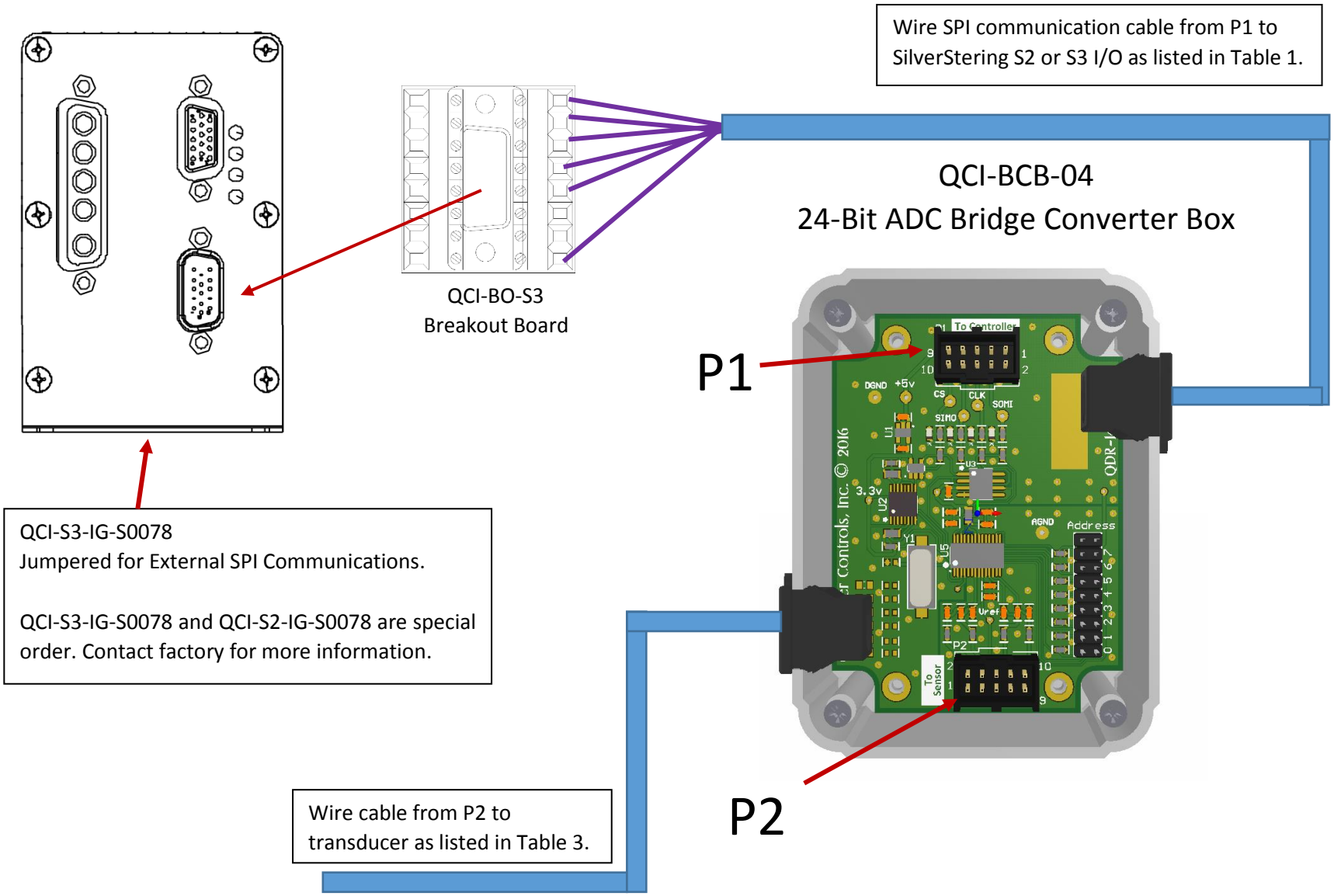

Part Number

24-Bit ADC Bridge Converter	
Bridge Converter	**Options**
QCI-BC • Two 4 ft. cables with mating connectors for P1 and P2 • Both cables are cutoff on the termination end to allow customer to customize cable length.	B-04 – Standard • Bridge Converter with Box and cable glands -04 – Board Only • Bridge Converter Board only
Example: For bridge converter with box	
QCI-BC	B-04
This selection creates the part number: QCI-BCB-04	

Contact Information

QuickSilver Controls, Inc.
990 N Amelia Ave
San Dimas, CA 91773
909-599-6291 or (888) 660-3801
909-599-6289 FAX
www.QuickSilverControls.com