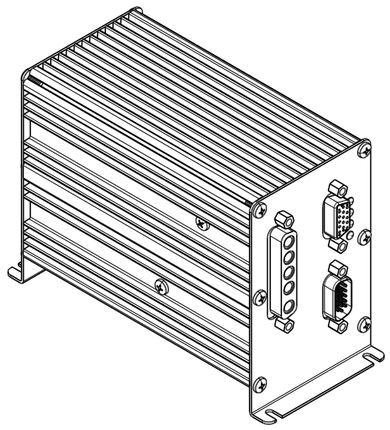

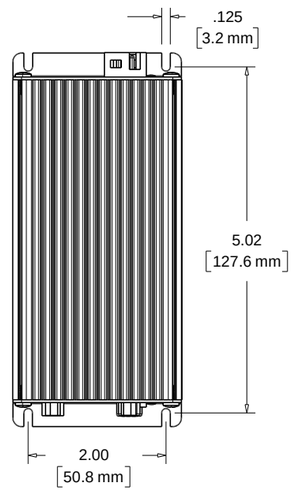
.125
[3.2 mm]
5.02
[127.6 mm]
2.00
[50.8 mm]

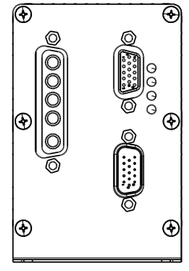

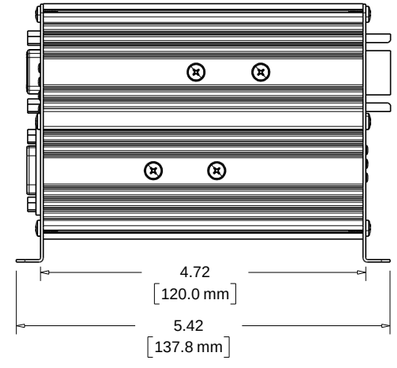
4.72
[120.0 mm]
5.42
[137.8 mm]

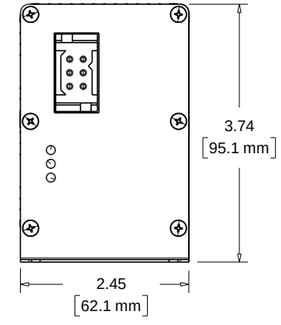
3.74
[95.1 mm]
2.45
[62.1 mm]